NP100

Programmable temperature controller

- 2 pattern / 20 segments (1 pattern / 10 segments)
- Fuzzy function, PID auto tuning
- Group PID 3 types
- Alarm output / Time signal output each 2 contacts
- Contact input 3 contacts (RUN, RESET, HOLD)
- Communication function (RS485 / 422)

Suffix code

Model	Code		Description
NP100-	□	□	Programmable temperature controller 96(W) X 96(H) ㎜
Control type	0		Universal type (heating)
Option		0	None
		1	Time signal 2 contacts
		2	Communication function (RS485/422)
		3	Time signal 2 contacts and communication (RS485/422)

Specification

Input

Thermocouple	K, J, E, T, R, B, S, L, N, U, W, PL2
RTD input	KPt 100 Ω, Pt 100 Ω
DC rated voltage	1 – 5 V DC, 0 – 10 V, –10 – 20 ㎷, 0 – 100 ㎷, 4 – 20 ㎃ (attach 250 Ω external resistance)
Input sampling time	250 ㎳
Input display resolution	Usually less than the decimal points of range
Input impedance	Min 1 ㏁ (thermocouple, DC rated voltage : ㎷) approx. 1 ㏁ (DC voltage : V) DC voltage (㎷ DC) / thermocouple / RTD : ±10 V DC
Allowable signal source resistance	Max 250 Ω (thermocouple input), Max 2 ㎏ (DC voltage input)
Allowable wiring resistance	Max 150 Ω /1 wire (RTD input But 3 wires must have same resistance value)
Allowable input voltage	±10 V (thermocouple, RTD, DC voltage : ㎷), ±20 V(DC voltage : V)
Scaling	–1999 ~ 9999 (SL–H 〉SL–L)
Cold junction compensation error	±2.0 ℃ (0 ~ 50 ℃)
Input signal break detection	UP Scale / DOWN Scale selection (thermocouple input), UP Scale (RTD input)
Input compensation	–100.0 ~ 100.0 % of FS
Input filter	OFF, 1 ~ 120 sec

Performance

Display accuracy	±0.1 % of FS ±1 Digit (K, J, E, T, L, U, W, PL2) ±0.15 % of FS ±1 Digit (R, B, S) ±0.2 % of FS ±1 Digit (N) ±0.1 % of FS ±1 Digit (RTD input) ±0.1 % of FS ±1 Digit (DC voltage input) (for the exception, please refer to input type and range chart)
Insulation resistance	Min 20 MΩ, 500 V DC 1st terminal-2nd terminal, 1st terminal-earth terminal, 2nd terminal-earth terminal
Dielectric strength	2300 V AC, 50 / 60 Hz, 1 minute (between the different recharging part)

Control function and output

Pattern and segment	2 patterns, 20 segments (1pattern/10 segments)
Control type	PID auto tuning
Control action	Select either reverse operation (heating) or direct operation (cooling) (By the parameter setting)
Range setting	Same as input range chart
Contact input (DI)	RUN, RESET, HOLD operation selection by the external contact input 3 contacts
Auto tuning	Target value auto tuning
Proportional band	0.1 ~ 999.9 % (FS)
Integral time	OFF, 1 ~ 6,000 sec
Differential time	OFF, 1 ~ 6,000 sec
A.R.W(Anti Reset Wind-up)	Auto, 50.0 ~ 200.0 % (proportional band)
ON/OFF control	Select the output type by parameters
PID group	4 types of PID group
Control mode selection	Select AUTO(programmable control) / MAN(manual control) by the front key
Manual reset	-0.5~105.0 % of output amount (when integral time is OFF)
Input break output	-0.5 ~ 105.0 % of output amount (set an amount of output when input breaks)
Hysteresis	0.0 ~ 100.0 % of FS (ON/OFF control output, alarm output)
Fuzzy operation	Select the fuzzy operation by parameter
Retransmission output	Present value/set value/amount of output/external power supply (24 V DC, 20 mA DC max) selection
Retransmission output scaling	Present value / set value scaling set up
Alarm output	2 contacts (high/low alarm, high/low deviation alarm, pattern end alarm and etc)
Alarm types	21 kinds (selection by parameter)
Proportional cycle	1 ~ 1,000 sec (with relay output, SSR output)

● Output

Control output	Relay	1c contact, 240 V AC, 3 A. 30 V DC 3 A(resistive load) time resolving power : smaller one between 0.1% and 100 ㎳
	SSR	Approximately min 25 V DC (resistive load min 600 Ω) limits within approximately 30 ㎃ DC with disconnection time resolving power : smaller one between 0.1% or 10㎳
	SCR	4 – 20 ㎃ DC (resistive load max 600 Ω) Accuracy : ±0.3 % of FS (4 – 20 ㎃ DC) Resolving power : approx. 3,000
Alarm output	Temperature alarm(Relay)	1 a X 2 contacts, 240 V AC, 3 A , 30 V DC 3 A (resistive load)
Time signal output	Transistor	Open collector output, 24 V DC 30 ㎃ max
Retransmission output	RET	4 – 20 ㎃ DC (resistive load max 600 Ω) Accuracy : ±0.3 % of FS (4 – 20 ㎃ DC), Resolving power : approx. 3,000

● Control output composition

Output symbol	Control output(OUT1)		Control output(OUT2)
	Relay output	SSR/SCR	RET/S.P.S
onoF	ON/OFF		RET (Retransmission output) S.P.S (External power supply) (6 – 7 terminal)
SSr		SSR	
CUr		SCR	
rLY	Relay		

General specification

Power supply voltage	100 – 240 V AC, 50 – 60 ㎐
Voltage Fluctuation	±10 % of power supply voltage
Power consumption	10 V A max.
Ambient temperature	0 ~ 50 ℃
Ambient humidity	35 ~ 85 % RH (without dew condensation)
Storage temperature	–25 ~ 70 ℃
Vibration resistance	10 – 55 ㎐, peak amplitude 0.75 ㎜ for 2 mins each in 3 axis direction
Shock resistance	300 ㎧, 3 times each in 3 axes direction
Weight	Approx. 696 g (included the weight of box)

Range and input code chart

Classification	Code	Input	Range(℃)	Accuracy	Note
Thermocouple	tC.K1	K	−200 ~ 1370 *1	±0.1 % of FS ±1 digit	*1 : max 0 ℃ : ±0.2 % of FS ±1 Digit *2 : 0 ~ 400 ℃ : ±5 % of FS ±2 Digit
	tC.K2	K	−199.9 ~ 999.9 *1		
	tC.J	J	−199.9 ~ 999.9 *1		
	tC.E	E	−199.9 ~ 999.9 *1		
	tC.t	T	−199.9 ~ 400.0 *1		
	tC.r	R	0 ~ 1700	±0.15 % of FS ±1 digit	
	tC.b	B	0 ~ 1800 *2		
	tC.S	S	0 ~ 1700		
	tC.L	L	−199.9 ~ 900.0 *1	±0.1 % of FS ±1 digt	
	tC.n	N	−200 ~ 1300	±0.2 % of FS ±1 digt	
	tC.U	U	−199.9 ~ 400.0 *1	±0.5 % of FS ±1 digit	
	tC.Y	W	0 ~ 2300		
	tC.PL	PL2	0 ~ 1390		
RTD	JPt.1	KPt100	−199.9 ~ 500.0		
	Pt.1	Pt100	−199.9 ~ 640.0		
DC voltage	d. 5V	1 − 5 V	Scaling range −1999 ~ 9999		※ When using the current input, please select the 1 − 5 V input code and attach 0.1 % of 250 Ω resistance between the 19 and 20 terminal and use it with 4 − 20 ㎃ input.
	d. 10V	0 − 10 V			
	d.20m	−10 − 20 ㎷			
	d. 100	0 − 100 ㎷			
DC current	d. 5V	1 − 5 V ※			

Dimension and panel cutout (unit : ㎜)

● Dimension

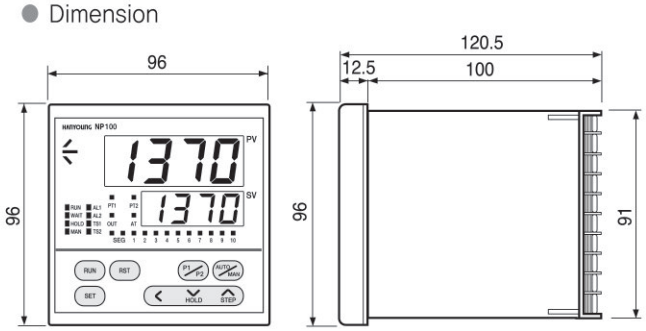

● Panel cutout

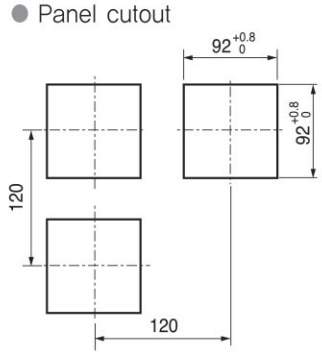

Connection diagram

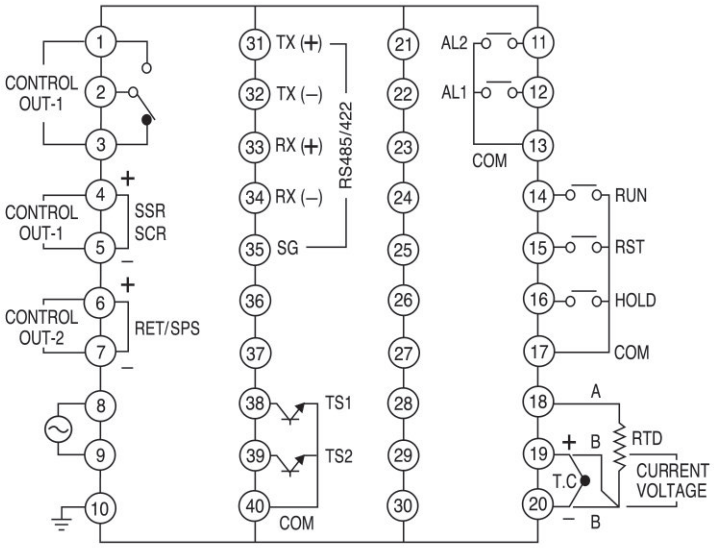

Option: communication (RS485/422), 2 contacts of time signal (TS1, TS2)

NP200

Programmable temperature controller

- Multi input/output, ±0.1 % high accuracy
- 30 patterns, 300 segments (1 Pattern/99 segments)
- Heating cooling PID control
- 3 stages level PID selection (PID group 4 types)
- PID auto tuning mode 2 types
- Contact input 7 contacts, user output 10 contacts
- Communication function (RS485 / 422)

Suffix code

Model	Code		Description
NP200-	□	□	Programmable temperature controller, 96(W) X 96(H) ㎜
Control type	0		Universal type (heating)
	1		Heating/cooling type (synchronous control type)
Option		0	None (DI-1 ~ DI-3 standard)
		1	Communication function (RS485/422)
		2	Contact input(DI) 4 contacts (DI-4 ~ DI7)
		3	Communication(RS485/422)+contact input 4 contacts (DI-4 ~ DI7)

※ Option contact input 4 contacts are (DI-4) ~ (DI-7)

Specification

Input

Thermocouple	K, J, E, T, R, B, S, L, N, U, W, PL2
RTD input	KPt 100 Ω, Pt 100 Ω
DC rated voltage	1 - 5 V DC, 0 - 10 V, -10 - 20 ㎷, 0 - 100 ㎷, 4 - 20 ㎃ (attach 250 Ω external resistance)
Input sampling time	250 ㎳
Input display resolution	Usually less than the decimal points of range
Input impedance	Min 1 ㏁ (thermocouple, DC voltage input : ㎷). approx. 1 ㏁ (DC voltage: V)
Allowable signal source resistance	Max 250 Ω (thermocouple input). Max 2 ㎏ (DC voltage input)
Allowable wiring resistance	Max 150 Ω/1 wire (RTD input. But 3 wires must have same resistance value)
Allowable input voltage	±10 V (thermocouple, RTD, DC voltage : ㎷). ±20 V (DC voltage : V)
Scaling	-1999.9 ~ 9999.9 (SL-H 〉SL-L)
Cold junction compensation error	±1.5 ℃ (15 ~ 35 ℃). ± 2.0 ℃ (0 ~ 50 ℃)
Input signal break detection	UP Scale/DOWN Scale selection (thermocouple input). UP Scale (RTD input)
Input compensation	-100.0 ~ 100.0 % of FS
Input filter	OFF. 1 ~ 120 sec

Performance

Display accuracy	±0.1 % of FS ±1 Digit. (K, J, E, T, L, U, W, PL2) (for the exception, please refer to the input type and range chart)
	±0.15 % of FS ±1 Digit. (R, B, S)
	±0.2 % of FS ±1 Digit. (N)
	±0.1 % of FS ±1 Digit. (RTD input)
	±0.1 % of FS ±1 Digit. (DC voltage input)
Insulation resistance	Min 20 MΩ, 500 V DC 1st terminal-2nd terminal, 1st terminal-earth terminal, 2nd terminal-earth terminal
Dielectric strength	2,300 V AC, 50 / 60 Hz, 1 minute (between the different recharging part), 1st terminal-2nd terminal, 1st terminal-earth terminal

Control function and output

Pattern and segment	30 patterns, 300 segments (1 pattern/99 segments)
Operation type	Select the program operation or fixation operation
Control type	PID control and ON/OFF control
Control action	Select either reverse operation (heating) or direct operation (cooling) (By the parameter setting)
Contact input(DI)	Contact input 7 contacts (RUN, RESET, HOLD, STEP, PT-END OFF select operation) 〉(select the pattern by the combination of contact input 4-7)
PID auto tuning	PID auto tuning by standard mode and low measurement value mode (set value -10 % of FS)
Proportional band	0.1 ~ 999.9 % (FS)
Integral time	OFF, 1 ~ 6,000 sec
Differential time	OFF, 1 ~ 6,000 sec
A.R.W(Anti Reset Wind-up)	Auto, 50.0 ~ 200.0 % (proportional band)
Proportion cycle	1 ~ 1000 sec (with relay output and SSR output)
ON/OFF control	Select the output types by the parameter
PID group	4 types of PID group
PID selection	Level PID control / segment PID control selection
Dead zone (D.B)	Set the dead zone when performing the heating/cooling control (-100.0 ~ 50.0 % of output value)
Manual reset	-0.5 ~ 105.0 % of output amount (when integral time is OFF)
Manual output	0 ~ 100 % of output amount
Input break output	-0.5 ~ 105.0 % of output amount (set an amount of output when input breaks)
Hysteresis	0.0 ~ 100.0 % of FS (ON/OFF control output, alarm output)
Fuzzy operation	Select the fuzzy operation by the parameter
Retransmission output	Present value/set value/amount of output/external power supply (24 V DC, 20 mA DC Max) selection
Retransmission output scaling	Present value / set value scaling set up
Alarm types	20 kinds (selected by the parameter)
Alarm setting range	Absolute alarm (0 ~ 100 % of range), deviation alarm (-100 ~ 100 % of range span)

User output: 10contacts

Number	Setting lists	Description
1	ALM 1~4	Alarm output 1~4 contact
2	TS1~TS5	Time signal output 1~5 contact
3	IS1~IS5	Inner signal output 1~5 contact
4	PTEND	Program pattern end output 1 contact
5	PROG	Output when program RUN 1 contact
6	FIX	Output when the fixed value control 1 contact
7	RESET	Output when the reset 1 contact
8	HOLD	Output when the hold 1 contact
9	WAIT	Output when the WAIT 1 contact
10	MAN	Output when the manual control 1 contact
11	PT UP	Output when the pattern increment 1 contact
12	PT DOWN	Output when the pattern decrement 1 contact
13	PT SOAK	Output when the pattern maintaining 1 contact

Output

Control output	Relay	1 c contact, 240 V AC, 3 A. 30 V DC 3 A(resistive load) time resolving power : smaller one between 0.1 % and 10 ㎳
	SSR	Approximately more than 25V DC (resistive load min 600 Ω) (limits within approximately 30 ㎃ DC with disconnection) time resolving power : smaller one between 0.1 % or 10 ㎳
	SCR	4 – 20 ㎃ DC (resistive load max 600 Ω) Accuracy : ±0.3 % of FS (4 – 20 ㎃ DC) Resolving power : approx. 3,000
User output	Temperature alarm	1a X 4 contacts (COM), 1a X 2 contacts (COM) 240 V AC, 3 A. 30 V DC 3 A (resistive load)
	Transistor	Open collector output X 4 contacts (COM) 24 V DC 30 ㎃ max
Retransmission output	RET	4 – 20 ㎃ DC.(resistive load min 600 Ω) Accuracy : ±0.3 % of FS (4 – 20 ㎃) Resolving power : approx. 3,000

Control output composition

Classification	Output symbol	Control output(OUT1)		Control output(OUT2)	
		Relay output	SSR / SCR	U 10	SSR / SCR(Current output)
Regular type	ON/OFF	ON/OFF		(U 10)	Retransmission output
	SSR		SSR		
	SCR		SCR		
	RLY	Relay			
Heating and cooling type	SSR/SSR		SSR	(U 10)	SSR
	SCR/SSR		SCR		
	RLY/SSR	Relay	(Retransmission output)		
	SSR/SCR		SSR	(U 10)	SCR
	SCR/SCR		SCR		
	RLY/SCR	Relay	(Retransmission output)		
	SSR/RLY		SSR	Relay	Retransmission output
	SCR/RLY		SCR		
	RLY/RLY	Relay			

General specification

Power supply voltage	100 – 240 V AC, 50 – 60 ㎐
Voltage fluctuation	±10 % of power supply voltage
Power consumption	10 VA max.
Ambient temperature	0 ~ 50 ℃
Ambient humidity	35 ~ 85 % RH (without dew condensation)
Storage temperature	–25 ~ 70 ℃
Vibration resistance	10 – 55 ㎐, 2 peak amplitude 0.75 ㎜ for 2 hrs each in 3 axis direction
Shock resistance	300 ㎧, 3 times each in 3 axes direction
Weight	Approx. 696 g (included the weight of box)

Range and input code chart

Classification	Input	Code	Range (℃)	Accuracy
Thermocouple	K	K1	−200.0 ~ 1,370.0 *1	±0.1 % of FS. ±1 Digit
	K	K2	−200.0 ~ 1,000.0 *1	
	J	J	−200.0 ~ 1,200.0 *1	
	E	E	−200.0 ~ 1,000.0 *1	
	T	T	−200.0 ~ 400.0 *1	
	R	R	0 ~ 1700	±0.15 % of FS ±1 Digit
	B	B	0 ~ 1800 *2	
	S	S	0 ~ 1700	
	L	L	−200.0 ~ 900.0 *1	±0.1 % of FS, ±1 Digit
	N	N	−200 ~ 1300	±0.2 % of FS ±1 Digit
	U	U	−200.0 ~ 400.0 *1	±0.1 % of FS. ±1 Digit
	W	W	0 ~ 2300	
	PL2	PL2	−200.0 ~ 600.0	
RTD	KPt 100 Ω	KS Pt100 Ω	−200.0 ~ 500.0	
	Pt 100 Ω	Pt100 Ω	−200.0 ~ 640.0	
DC voltage	1 − 5 V	1/5 V	Scaling range −1,999 ~ 9,999	
	1 − 10 V	0/10 V		
	−10 − 20 ㎷	−10/20 ㎷		
	0 − 100 ㎷	0/100 ㎷		
DC current	4 − 20 ㎃ DC	1/5 V *3	Scaling range −1,999 ~ 9,999	

(Cautious) *1 : lower than 0 ℃ degree Celsius : ±0.2 % of FS ±1 Digit

*2 : 0 ~ 400 ℃ degree Celsius range : ±5 % of FS ±2 Digit

*3 : When using the current input, please attach 0.1 % of 250 Ω resistance between the 19 and 20 terminals and use it as 4 − 20 ㎃ DC input.

Dimension and panel cutout (Unit : ㎜)

●Dimension

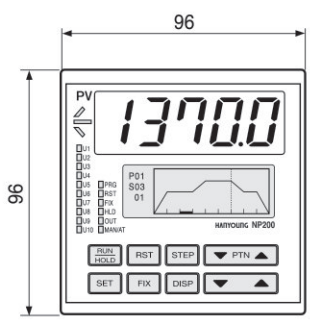

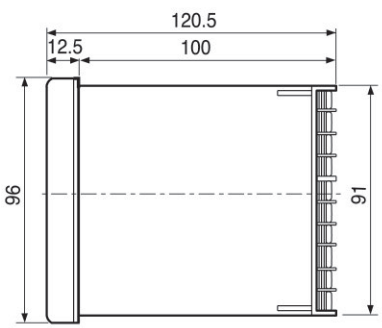

● Panel cutout

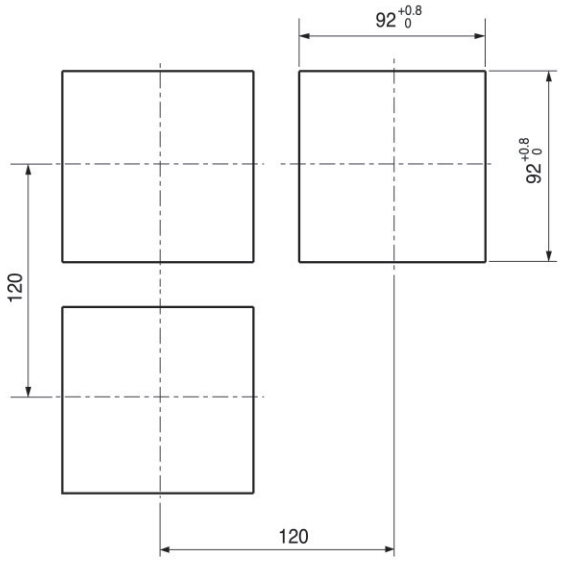

Connection diagram

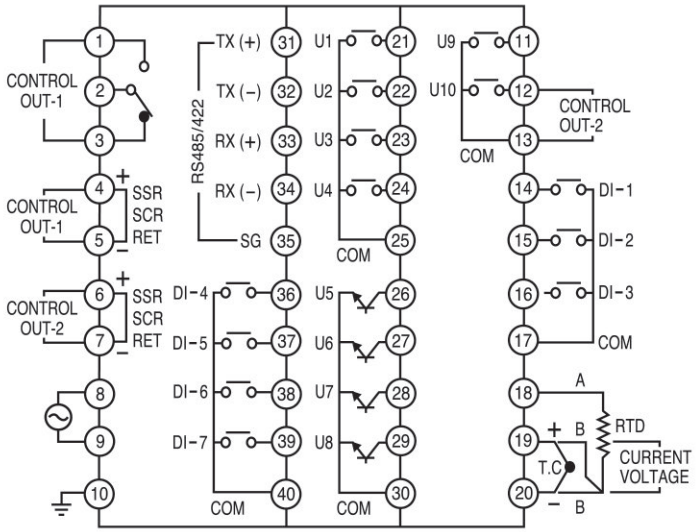

Option: communication (RS485/422), 4 contacts of contact inputs (DI-4 ~ DI-7)