Slim type Photo Sensor

PY series

INSTRUCTION MANUAL

Thank you for purchasing HANYOUNG NUX CO,.Ltd. Product. Please check whether the prouduct you purchased is the exactly same as you ordered. Before using product, please read instruction maunal carefully.

HANYOUNG NUX

HEAD OFFICE 1381-3, Juan-Dong, Nam-Gu, Incheon, Korea
TEL:(+82-32)876-4697 FAX:(+82-32)876-4696

Safety information

Before you use, read safety precautions carefully, and use this product properly. The precautions described in this manual contains important contents related with safety; therefore, please follow the instructions accordingly. The precautions are composed of DANGER, WARNING and CAUTION.

⚠WARNING

- This product is not for outdoor use. (It is the cause of weakening the product durability and possible electric shock.)
- Since this product is not designed with explosion-protective structure, do not use it at any place with flammable or explosive gas.
- Do not use this product at any place with direct vibration or impact.

⚠CAUTION

- When the lens of the photo sensor is contaminated by foreign substance, use a dry cloth to wipe off the substance. Never use thinner or organic solvents.
- Separate high voltage cable and power line from sensor wire. Be cautious since using a same pipe arrangement for the wire could cause malfunction.
- This product is equipped with a structure (IP67), which allows partial waterproof but do not use this product under water at all times.
- If the cable needs to be extended, use over 0.3 ㎟ and be cautious of a possible sudden drop in voltage.
- When using the sensor under the light such as fluorescent lighting or mercury lamp with high frequency, block it with a light trap and avoid the lens from facing the light directly.
- Malfunction can occur due to mutual interference when using the through beam type photo sensor more than 2 pairs. Therefore, leave a plenty of space for the mutual distance length and place the light transmitter section and light receiver section in alternating positions.
- Using inductive load (relay, coil) for the output of power can cause an immediate increase in load by twice and damage the TR of the output of power. Therefore, set up half of the maximum load.
- There is an over-current protection circuit within the output side that breaks the output when the current is higher than the regular load current. Use within the 70% of the maximum load.
- Refrain from using the product in such locations with heavy dust or foreign substances that can contaminate the lens since there is a chance of malfunction.
- The contents of the instruction manual can be modified without prior notification or advance announcement.
- When using the product with the methods other than those established by the manufacturer, injury or loss in assets can occur.
- When using the Switching Power Supply as the power source, earth the Frame Ground (F.G) terminal and be sure to connect the noise-eliminating condenser between OV and F.G.

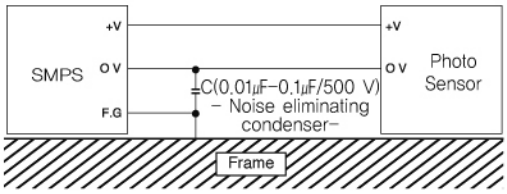

※ Please keep the contents mentioned above as cautions for safety since they can cause the product to breakdown.

Suffix code

MODEL	Suffix Code				Description
PY-	□	□	□	□	Slim type Photo Sensor
Detection	T				Through beam
Range		3			3 m
Output			N		NPN Open Collector Output
			P		PNP Open Collector Output
Operation				D	Dark ON Operation
				L	Light ON Operation

Specification

MODEL			
	NPN	PY-T3N-D	PY-T3N-L
	PNP	PY-T3P-D	PY-T3P-L
Sensing method		Through - beam	
Sensing distance		3 m	
Sensing object		min object (over 5 ㎜ then opaque object)	
Power voltage		12 - 24 V d.c ± 10 % (Max. ripple 10%)	
Current consumption		Emitter : 23 ㎃, Receiver : less than 18 ㎃ (with 24V d.c)	
Output	Control	NPN/PNP open collector output max 100 ㎃ (30V d.c)	
	Stable	NPN open collector output less than 50 ㎃ (30 V d.c) (but there is no stable output in the PNP output type)	
Output action		Dark ON)	Light ON)
Response time		max. 1 ㎳	
Hysteresis		within 10% of the sensing distance	
Light source (wave length)		Infrared lightening diode LED (890 ㎚)	
LED		Emitter : red LED (power indication) Receiver : red LED control output, green LED : stable output	
Protective circuit		Power reverse connection protecting circuit and output break protecting circuit (exclude the stable output)	
Ambient illumination		Sunlight : max 11000 lx, Incandescent lamp : max 3000 lx	
Ambient temperature		-25 ~ 55 ℃ (Surrounding storage temperature : -25 ~ 70 ℃)	
Ambient humidity		35 ~ 85 % R.H. (with no condensation)	
Protective structure		IP 67	
Insulation resistance		min. 20Mohm, (500V d.c between the code and case)	
Dielectric strength		1,000 V a.c (50/60 ㎐ for 1 min)	
Vibration resistance		10 - 55 ㎐, double amplitude : 1.5mm for 2 hours in X, Y and Z direction	
Shock resistance		500 ㎧, 3 times each in X, Y and Z directions	
Connection method		Emitter : 2P, Receiver : 3P (NPN type 4P), thickness : 0.3mm, length : 2m	
Material		Case : PC, Lens : PC	
Weight		approx. 66g	

Dimension

[Unit: mm]

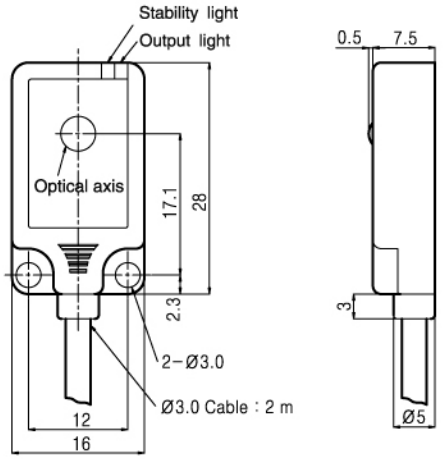

Output circuit

NPN open collector output

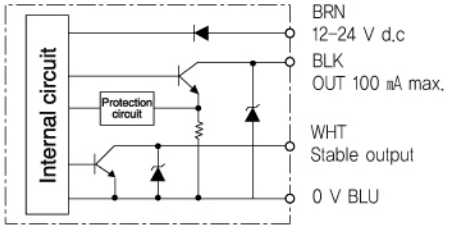

PNP open collector output

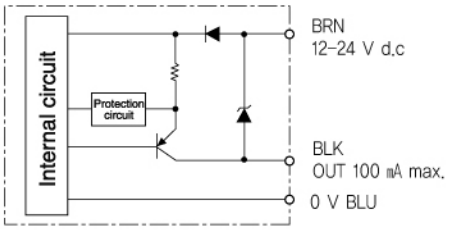

Operation chart

Operation mode	Output method	Receiver light / Stability level / Operation level (120 %, 100 %)
Light ON	Control output	ON / OFF
	Stable output	ON / OFF
Dark ON	Control output	ON / OFF
	Stable output	ON / OFF

(Cautious) The stability output is used for checking convulsion changes after setting the distance or level drop during it usage at the initial stage. If the amount of light exceeds the operation level of 120% (stable level) or get distant from the standard detection distance, the control output of power will recognize it as an OFF state and generate the power. However the PY-T3P-D/ type has the stability indication function only and not the stability output of power

Connection diagram

NPN open collector output

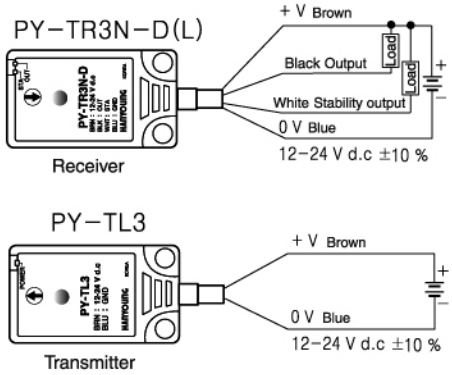

PNP open collector output

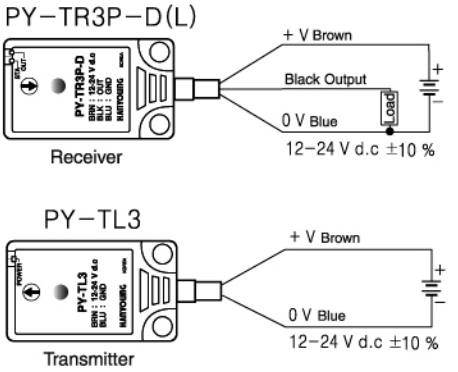

LED (indicator)
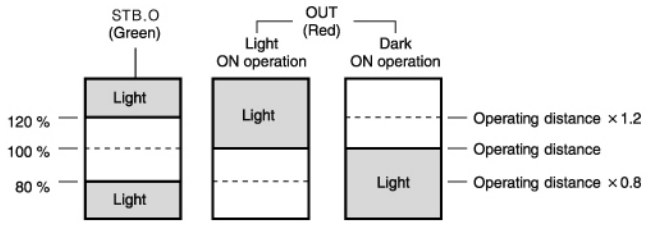
- Operation LED (red LED) and stability LED (green LED) indicate the level of the picture
- Setting within the stable area will provide the high reliability regarding the change of a light amount even after setting up.