TPR-3N / TPRF-3N

3-phase power regulator

- Digital display and set
- Various protective function
- Resistive load / inductive load internally selectable
- Soft start / soft up / soft down
- Power failure and fuse break, load break alarm (L.L)

Suffix code

Model	Code			Information
TPRF-3N	□	□	□	3 phase power regulator (No indication function)
TPR-3N				3 phase digital power regulator (Digital displaying type)
Power supply voltage		220		220 V AC
		380		380 V AC
		440		440 V AC
Rated current			70	70 A
			100	100 A

Specification

Model	TPRF-3N□□□ (Digital display)	TPR-3N□□□ (Regular type)
Function	• LED display function • input signal selection • Operation mode selection (resistive load, induction load)	
	• Over current alarm output (O.C) • Power failure and fuse break alarm output • Load break alarm (L.L) • Alarm output • Heat sink over heated alarm output (TPRF-3N)	
	• Heat sink over heated alarm output(OT) • Display function by the 7 segments	• LED ON when heat sink is over heated (OT) (thermal start fixed to 85 ℃)
Number of phase	Three phase	
Rated current	70 A, 100 A	
Control method	Phase control, ON/OFF control	
Applying load	Resistive load, induction load	
Power supply voltage	(220, 380, 440 V) AC, 50/60 Hz(dual usage)	
Output voltage range	More than 95 % of the input voltage (min load more than 0.5A)	
Input signal	4 – 20 ㎃ DC, 0 – 5, 1 – 5, 0 – 10 V DC contact input, manual setting	
Output setting range	• Slope setting : 50 % (when inductive load is selected) • Output Limit : 0 ~ 100 % • Manual setting : 0 ~ 100 % (selected by the external B 10KΩ volume or parameter)	

Movement method	• Soft start(setting : 0 ~ 250sec) • Soft Up / Soft Down (setting : 0 ~ 50sec)	• Soft Up / Soft Down(setting : 0 ~ 50sec)
Alarm output	• Over current alarm (O.C) • Power failure and fuse break alarm • Load break alarm • Heat sink over heated alarm (set range : TPRF-3N 0 ~ 100 ℃)	
	• Relay contact output (1a contact) • 250 V AC, 10 A max. (resistive load)	
Insulation resistance	Min 100 MΩ, 500 V DC	
Dielectric strength	2,000 V, for 1 min	
Weight	Approx 5 ㎏ (Included the weight of box)	

Environment specification

Cooling method	Forced cooling by the FAN
Ambient temperature	0 ~ 50 ℃
Ambient humidity	35 ~ 85 % RH (no condensation allowed)
Storage temperature	-25 ~ 70 ℃

Name of each part

● Model : TPR-3N (70 A, 100 A)

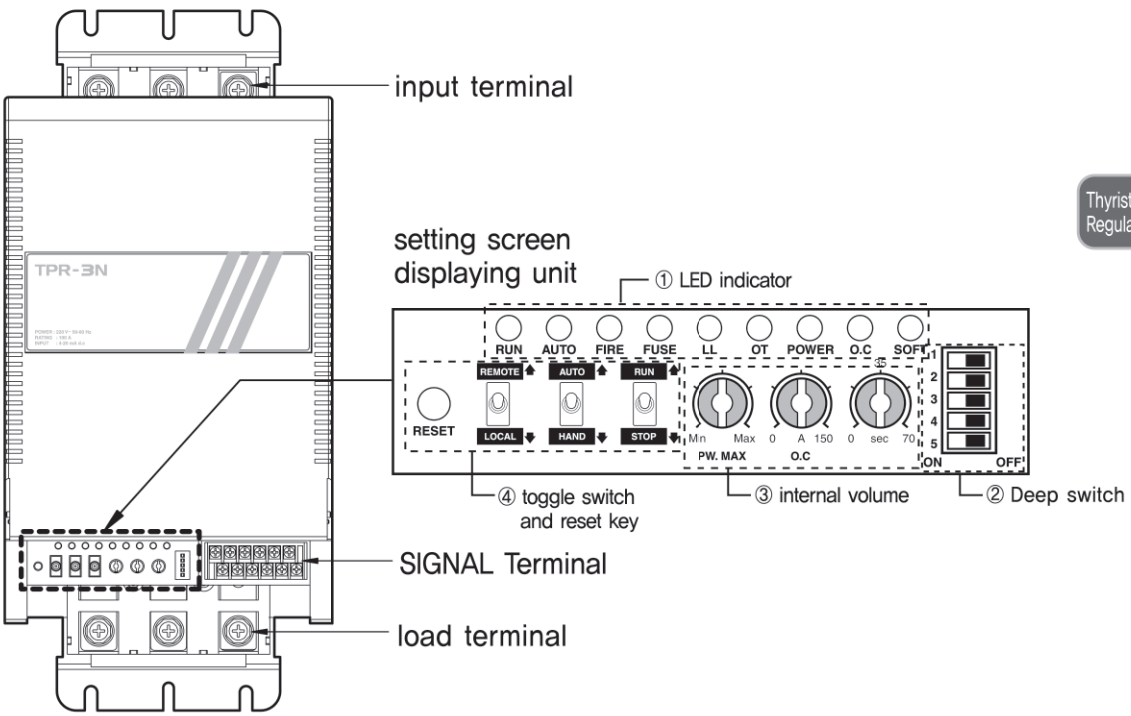

• LED display

Number	LED name	Information
①	SOFT	L.ON when operates the soft start
②	O.C	L.ON when value exceeds the over current set value
③	POWER	Always L.ON when power is supplied in
④	O.T	L.ON when heat sink temperature is above 85 ℃
⑤	L.L	Generating the output more than the load break set value is generating and if load current is less than 1A then light becomes ON
⑥	FUSE	L.ON with internal fuse break
⑦	FIRE	L.ON when output becomes ON and L.ON proportional to an output amount
⑧	AUTO	L.ON when performing auto-operation
⑨	RUN	Always L.ON when operating (RUN) (L.OFF when selecting STOP)

• Deep switch

	Input signal selection			Operation mode selection		Load break selection		
	Set information	SW1	SW2	Set information	SW3	Set information	SW1	SW2
1 2 3 4 5 ON ↔ OFF	4 – 20 ㎃	ON	ON	Resistive load	ON	NON	ON	ON
	0 – 5 V	ON	OFF	Inductive load	OFF	30 %	OFF	ON
	0 – 10 V	OFF	ON	–	–	40 %	ON	OFF
	1 – 5 V	OFF	OFF	–	–	50 %	OFF	OFF

• Selecting the operation mode as inductive load will limit the max output to 50%.
• Switch conversion is not recognized during operation so please supply in the power after checking the switch

• Front volume

Volume / Reset key		Information
Output limitation setting (PW.MAX)	PW.MAX	Function which limits an output amount. Output 0% when volume is positioned at min and output 100% when it is positioned at max. • Default setting : 100% (max.) • No correspondence when performing ON/OFF control
Over current alarm setting(O.C)	O.C	The current LED becomes ON immediately when input value is more than the set value and if that value is maintained for more than 0.5 sec then alarm output will become ON. • Default set value : 70A or 100A • Set range : 0~rated current (max value)
Soft start setting	SOFT START	ON the switch for the first time when using the inductive or capacitive load, max value power will be supplied into the load which may damage the load or destroy the power device. This setting increases the load voltage gradually. • Default setting: 0 (Set range: 0~50 sec) • It is not operated with "0" setting • No correspondence when performing ON/OFF control

• Front Toggle Switch and Reset key

switch	Information
REMOTE LOCAL	Select whether users will use the external manual controlling volume which connected to the terminal or the internal output limitation (PW.MAX) • REMOTE : Selected when using the external volume connected to the terminal • LOCAL : Selected when using the output limitation (PW.MAX) setting internal volume
AUTO HAND	Select whether users will use the control output (4-20mA) of controller as input signal or not (use volume) • AUTO : Selected when using the control output (4-20mA) of controller as input signal • HAND : Not using the input signal (4-20mA) (select the setting by volume)
RUN STOP	Select the control action as RUN state or STOP state • RUN : Selected when it is in the general control state • STOP : Selected when stopping the control action temporarily (output OFF)
	When using the RUN/STOP which operates by the external contact input (DI), please select the internal RUN/STOP toggle switch as STOP side
RESET	Control state becomes the hold state temporarily when alarm output is ON. Pressing the Reset key after solving the problem will restore the setting.

• Example of toggle switch selection

Switch selection	Information
REMOTE - LOCAL	Use external volume, ignore internal volume, use input signal
REMOTE - HAND	Use external volume, ignore internal volume, ignore input signal (output variation by the external volume)
LOCAL - AUTO	Ignore external volume, use internal volume, use input signal
LOCAL - HAND	Ignore external volume, use internal volume, ignore input signal (output variation by the external volume)

● Model : TPRF-3N

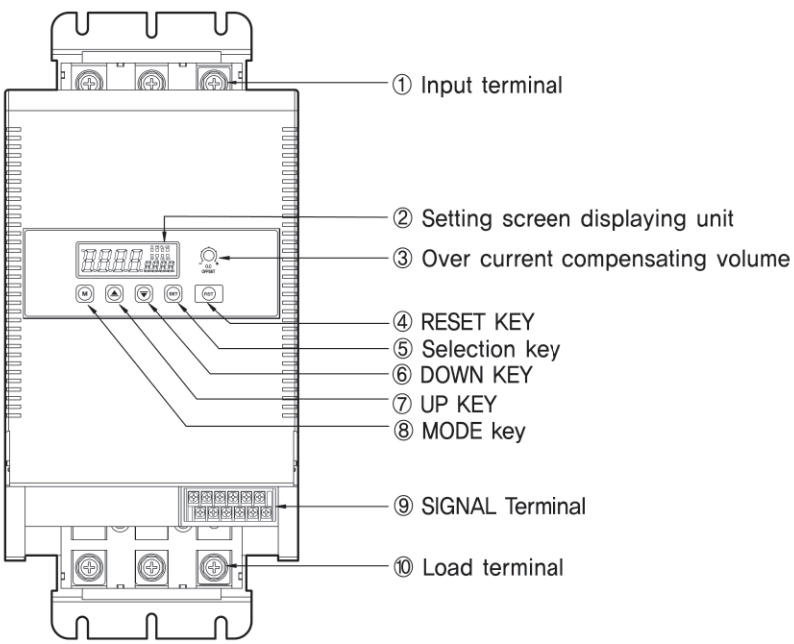

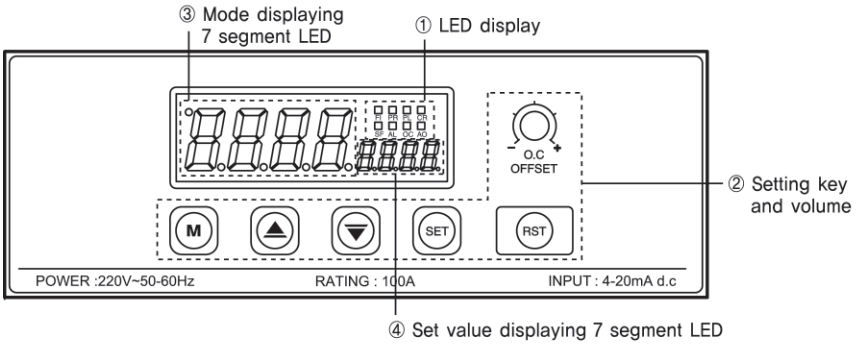

• LED display

Number	LED name	Explanation
①	FI	L.ON when output becomes ON and becomes L.ON proportional to an output amount
②	PR	L.ON when selecting resistive load
③	PL	L.ON when selecting inductive load
④	S.F	L.ON when operating the soft start
⑤	A.L	L.ON with over current, heat sink temperature alarm operation
⑥	O.C	L.ON when value exceeds the over current set value
⑦	A.O	L.ON when performing the auto-operation

• Setting key and volume

Name of each button		Explanation
M	Mode button	Enter into the manual mode and save the data
▲	Incremental button	Increase the set value
▼	Decrement button	Decrease the set value
SEL	Selecting button	Manual operation/auto operation selectable by pressing it for 2 sec When performing manual operation, it varies an output amount by pressing increment/decrement key disregarding the input signal Press it for 2 sec again then it will save the setting and return to the auto operation mode
RST	Reset button	System temporarily stops when alarm occurs. Pressing this button will restore the setting
O.C OFFSET	Over current compensating volume	Compensate the current indicated value displayed in the displaying unit (default setting: positioned in the middle) ※Applied only when performing phase control

• **Mode displaying 7 segment LED** : Mode of each list will be displayed when setting the parameter

• **Set value displaying 7 segment LED** : Display the set value when setting the parameter Also, it displays the measured value which selected in the displaying mode during operation.

Parameter composition

actuating key	name	default value	Description
M	LOCK Key lock level selection	OFF	OFF : lock cancel LOC 1 : lock all LOC2 : auto mode lock
	ISEL Input type selection	4-20	4 – 20 (mA), 1 5 (V), 0 – 10 (V) VOL : Set by the manual volume (10KΩ) ON/OFF : ON/OFF control by the external contact input ※ Input specification with dot in present, the output limitation by the external volume setting is applied.
	OPrt Operation mode selection	PA-r	PA-r : resistive load (phase control) Mot : inductive load (phase control) ※ output amount limited to 50%
	GrdF Output limitation setting	100	Set the output limitation value (set range : 0 ~ 100 %)
	ELEF Elevation setting	0	Input signal compensation about output amount (set range : –100 ~ 100)
	SSt Soft start setting	30	Set the reaching time from when supplying in the power or starting operation to the time when reaching the output amount corresponding to the input signal (set range: 1 ~ 250 sec)
	Sud Soft up and soft down setting	5	During controlling, it sets the time to reach the output amount corresponding to the critical variation of input signal(set range : 0 ~ 50 sec)
	oc Over current alarm setting	0	Over current protective alarm value setting (set range : 0 ~ 100 A)
	ot Over heating alarm setting	0	Over temperature alarm value of heat sink setting (set range : 0 ~ 100 ℃)
	LL Load break alarm setting	0	When the load current is above the set value, alarm output will become ON if the load current is less than 1A. (Set range: 0~100A)
	LInt Output limitation function selection	oLIn	oLIn : Slope setting function selection ILIn : Output limitation setting function selection
	dISP Display mode selection	InP	INP selection : input signal percentage display OUT selection : output voltage percentage display CUR selection : load current display(A) HST selection : heat sink temperature display(℃)
	Id Communication device number setting	0	Set the communication address (set range : 0 ~ 255)
	bRud Communication speed setting	96	Set the communication speed (set range : 24 ~ 1 Mbps)

Cautious) selecting the operation mode as phase control inductive load will limit the output amount to 50%.

Dimension and panel cutout (unit: mm)

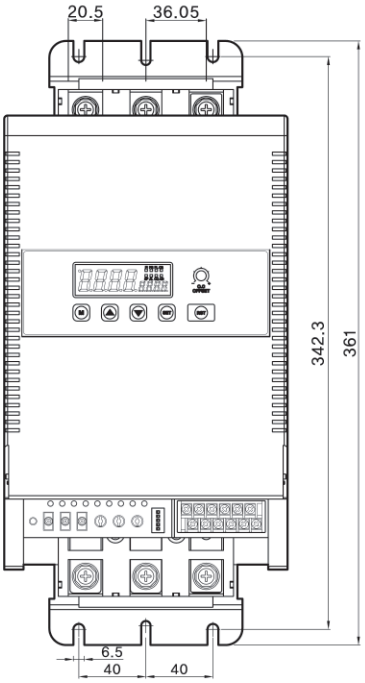

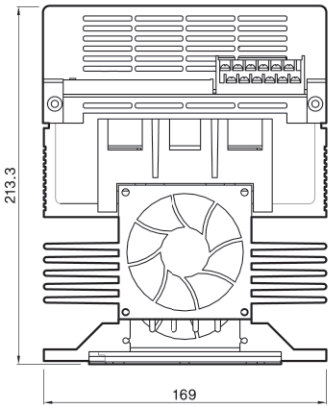

Connection diagram

● when using 4 – 20 ㎃ DC